MyLUNOS Pro

EN

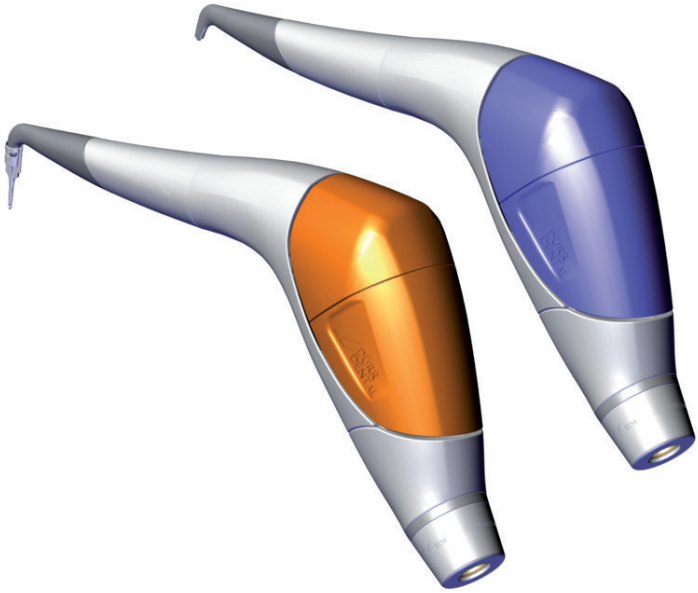

Installation and operating instructions

CE 0297

2034100192L30

DÜRR DENTAL

2101V008

EN

Contents

Important information

1 About this document 3
1.1 Warnings and symbols 3
1.2 Copyright information 4

2 Safety 4
2.1 Intended purpose 4
2.2 Intended use 4
2.3 Improper use 5
2.4 Indications 5
2.5 Contra indications 5
2.6 General safety information 5
2.7 Specialist personnel 6
2.8 Notification requirement of serious incidents 6
2.9 Only use original parts 6
2.10 Transport 6
2.11 Disposal 6

Product description

3 Overview 7
3.1 Scope of delivery 9
3.2 Optional items 9
3.3 Accessories 10
3.4 Consumables 10
3.5 Wear parts and replacement parts 10

4 Technical data 11
4.1 Classification 12
4.2 Type plate 12
4.3 ID number powder container . . . 12
4.4 Evaluation of conformity 12

5 Operation 13

Usage

6 Preparing the device for treatment . . 15
6.1 Check the turbine connection . . 15
6.2 Check the o-rings 15
6.3 Connect the handpiece and dry the inner lumen. 15
6.4 Set the water throughflow volume and air pressure 16
6.5 Check the jet formation 17
6.6 Fill the powder container 17
6.7 Possible applications of the powder container rest 21

7 Precautionary measures 22

8 Treatment 23
8.1 Treatment with the powder jet handpiece Perio 24
8.2 Treatment with the powder jet handpiece Perio 24
8.3 Precautionary measures after treatment 27
8.4 Place down the handpiece 27

9 After every treatment 28
9.1 Removing the single-use tip "LUNOS Perio Tip" 28
9.2 Check the rinsing adapter 30
9.3 Removal of powder residue from the nozzle 30

10 Reprocessing 32
10.1 Risk analysis and categorisation . 32
10.2 Preparation process in accordance with ISO 17664 32
10.3 General information 33
10.4 Preparation at the operating location 34
10.5 Manual pre-cleaning 34
10.6 Manual cleaning, intermediate rinsing, disinfection, final rinse, drying 35
10.7 Automatic cleaning, intermediate rinsing, disinfection, final rinse, drying 38
10.8 Check for function 40
10.9 Steam sterilising 40
10.10 Issue clearance for the parts for sterilisation 41
10.11 Storing parts for sterilisation . . . 41

EN

11 Maintenance 42
11.1 Maintenance schedule 42
11.2 Removal of powder residue from the nozzle 43
11.3 Cleaning the suction nozzle and dome valve when changing the powder container 43
11.4 Free from blockages 43
11.5 Freeing the main body of blockages 43
11.6 Check the bayonet catch for its function 44
11.7 Check the dome valve 44
11.8 Replace the dome valve and o-rings on the powder container . . 44
11.9 Replace the o-rings on the corpus 45
11.10 Replace the suction nozzle and the o-ring 45

Troubleshooting

12 Tips for operators and service technicians 46

Appendix

13 Handover record 48

EN

Important information

1 About this document

These installation and operating instructions represent part of the unit.

If the instructions and information in these installation and operating instructions are not followed, Dürr Dental will not be able to offer any warranty or assume any liability for the safe operation and the safe functioning of the unit.

The German version of the installation and operating instructions is the original manual. All other languages are translation of the original manual.
These installation and operating instructions apply to:
MyLunos Pro Set Supra
Order number: 2034900050; 2034900051; 2034900052; 2034900053; 2034900054
MyLunos Pro Set Pro
Order number: 2034910050; 2034910051; 2034910052; 2034910053; 2034910054
Lunos Expansion Set Perio
Order number: 2034900100

1.1 Warnings and symbols

Warnings

The warnings in this document are intended to draw your attention to possible injury to persons or damage to machinery.
The following warning symbols are used:

General warning symbol

The warnings are structured as follows:

SIGNAL WORD
Description of the type and source of danger

Here you will find the possible consequences of ignoring the warning

› Follow these measures to avoid the danger.

The signal word differentiates between four levels of danger:
- **DANGER**
  Immediate danger of severe injury or death
- **WARNING**
  Possible danger of severe injury or death
- **CAUTION**
  Risk of minor injuries
- **NOTICE**
  Risk of extensive material/property damage

Other symbols

These symbols are used in the document and on or in the unit:

Note, e.g. specific instructions regarding efficient and cost-effective use of the unit.

Observe the operating instructions.

CE labelling with the number of the notified body

Manufacturer

Not sterile

Do not reuse

Do not re-sterilise

Do not use if packaging is damaged

Expiry date

Thermal disinfection and cleaning

Steam sterilise at 134 °C

Lower and upper temperature limits

Lot designation

EN

STERILE EO Sterilised with ethylene oxide (STERILE EO)

MD Medical device

HIBC Health Industry Bar Code (HIBC)

REF Order number

SN Serial number

Wear protective gloves.

Wear protective goggles.

Use a mask.

Use protective clothing.

H_2O Rinse with water.

Clean Rinse with instrument cleaner.

Disinfect Rinse with instrument disinfectant.

1.2 Copyright information

All circuits, processes, names, software programs and units mentioned in this document are protected by copyright.
The Installation and Operating Instructions must not be copied or reprinted, neither in full nor in part, without written authorisation from Dürr Dental.

2 Safety

Dürr Dental has designed and constructed this unit so that when used properly and for the intended purpose it does not pose any danger to people or property.
Despite this, the following residual risks can remain:

- Personal injury due to incorrect use/misuse
- Personal injury due to mechanical effects
- Personal injury due to electric shock
- Personal injury due to radiation
- Personal injury due to fire
- Personal injury due to thermal effects on skin
- Personal injury due to lack of hygiene, e.g. infection

WARNING

The development of emphysema

Soft tissue can be damaged as a result of careless handling.

› Do not dwell in the area being treated for any longer than is necessary.

2.1 Intended purpose

This device is a powder jet handpiece for use in dental applications. It is used predominantly for the removal of plaques, deposits and discolourations on teeth, as well as for the cleaning of brackets, dental braces, crowns and bridges. In addition, the device can also be used to assist with the treatment of periodontal defects.

2.2 Intended use

Mobile powder-water jet handpiece for adaptation to the turbine coupling of a dental treatment unit.
It can be used to remove supragingival plaques (mainly soft ones) and discolourations (pigments, the basic colour of the tooth remains unaffected) and subgingival biofilm. The treatment spectrum covers everything from periodontology, periimplantitis and prophylaxis (PZR) to cariology (conditioning of fissure sealing)
We recommend working with Lunos® Prophy Powder Gentle Clean (supragingival only) or Lunos® Prophy Powder Perio Combi (supragingival and subgingival). When using other powders, the properties of the powder materials and

the grain size will need to be considered. Approved powder materials for medium grain size (14 to 70 µm) are sodium bicarbonate, glycine, trehalose and erythritol.

2.3 Improper use

Any use of this appliance / these appliances above and beyond that described in the Installation and Operating Instructions is deemed to be incorrect usage. The manufacturer cannot be held liable for any damage resulting from incorrect usage. The operator will be held liable and bears all risks.
Strongly abrasive jet materials can cause irreparable damage to the device.
Strongly abrasive jet materials such as silicon carbide and aluminium oxide may not be used.

2.4 Indications

Supra

We recommend using the Supra powder jet handpiece MyLUNOS Supra for removing soft, supragingival plaques and discolouration:

- Before fluoride treatment
- Before tooth whitening
- Before applying seals
- Before determining the colour
- For orthodontics patients
- For preparing surfaces before the adhesion and cementing of inlays, onlays, crowns and facings
- For the preparation of surfaces prior to placing composite restorations
- Before the adhesion of orthodontic brackets

Perio

We recommend using the powder jet handpiece MyLUNOS Perio for the removal of subgingival biofilm, e.g. in the scope of periodontitis treatment:

- on subgingival gingival pockets
- for cleaning of implant surfaces

2.5 Contra indications

WARNING

Organ disorders

Serious conditions such as cardiovascular or renal impairment

- Do not treat patients with the powder water jet handpiece.

WARNING

Breathing difficulties

The powder water air mixture can cause respiratory problems in patients suffering from respiratory disorders.

- Do not treat patients with the powder water jet handpiece.

WARNING

The development of emphysema

Do not expose soft tissue to the powder flow during the Supra application as this could result in emphysema formation in the tissue.

- Do not direct the nozzle tip directly on the gums, the tongue or in the gum pockets.

Comply with the specifications of the prophylaxis powder operating instructions. These may contain further safety instructions.

2.6 General safety information

- Always comply with the specifications of all guidelines, laws, and other rules and regulations applicable at the site of operation for the operation of this unit.
- Check the function and condition of the unit prior to every use.
- Do not convert or modify the unit.
- Comply with the specifications of the Installation and Operating Instructions.
- The Installation and Operating Instructions must be accessible to all operators of the unit at all times.

EN

2.7 Specialist personnel

Operation

Unit operating personnel must ensure safe and correct handling based on their training and knowledge.

› Instruct or have every user instructed in handling the unit.

Installation and repairs

› Installation, readjustments, alterations, upgrades and repairs must be carried out by Dürr Dental or by qualified personnel specifically approved and authorized by Dürr Dental.

2.8 Notification requirement of serious incidents

The operator/patient is required to report any serious incident that occurs in connection with the device to the manufacturer and to the competent authority of the Member State in which the operator and/or patient is established/resident.

2.9 Only use original parts

› Only use accessories and optional items that have been recommended or specifically approved by Dürr Dental.

› Only use only original wear parts and replacement parts.

DÜRR MEDICAL accepts no liability for damages or injury resulting from the use of non-approved accessories or optional accessories, or from the use of non-original wear parts or replacement parts.

The use of non-approved accessories, optional accessories or non-genuine wear parts / replacement parts (e.g. mains cables) can have a negative effect in terms of electrical safety and EMC.

2.10 Transport

The original packaging provides optimum protection for the unit during transport.
If required, original packaging for the unit can be ordered from Dürr Dental.

Dürr Dental will not accept any responsibility or liability for damage occurring during transport due to the use of incorrect packaging, even where the unit is still under guarantee.

› Only transport the unit in its original packaging.

› Keep the packing materials out of the reach of children.

2.11 Disposal

Unit

The unit may be contaminated. Instruct the company disposing of the waste to take the relevant safety precautions.

› Decontaminate potentially contaminated parts before disposing of them.

› Uncontaminated parts (e.g. electronics, plastic and metal parts etc.) should be disposed of in accordance with the local waste disposal regulations.

› If you have any questions about the correct disposal of parts, please contact your dental trade supplier.

An overview of the waste keys for Dürr Dental products can be found in the download area at www.duerrdental.com (document no. P007100155).

Product description

EN

3 Overview

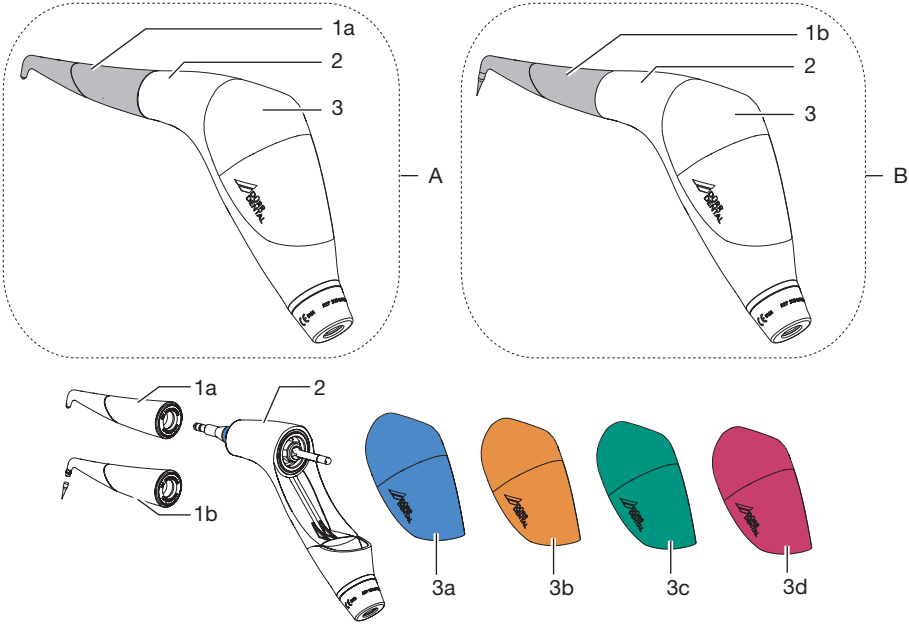

A	Powder jet handpiece MyLUNOS with Supra nozzle
B	Powder jet handpiece MyLUNOS with Perio nozzle
1a	Supra nozzle
1b	Perio nozzle
2	Corpus
3	Powder container
3a	Powder container in blue
3b	Powder container in orange
3c	Powder container in mint green
3d	Powder container in cerise

EN

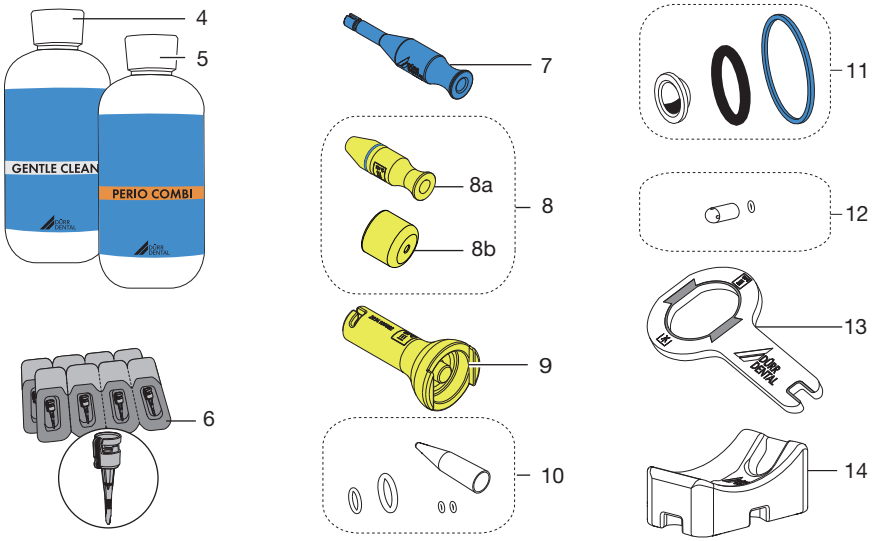

4 Lunos Prophy Powder Gentle Clean (Supra)
5 Lunos Prophy Powder Perio Combi (Perio)
6 LUNOS Perio Tips
7 Rinsing adapter for the nozzle (blue) for cleaning after ever treatment and following blockage
8 Rinsing adapter for use during reprocessing
8a Rinsing adapter for nozzle (yellow) for use during reprocessing
8b Rinsing adapter for corpus (yellow) for use during reprocessing
9 Function tool
10 O-ring set for corpus
11 O-ring set for powder container
12 O-ring and suction nozzle for the powder-air line
13 Combination wrench
14 Tray for powder container

The MyLUNOS Supra Set includes a blue powder container as standard in the scope of delivery. The MyLUNOS Pro Set includes both the blue and orange powder containers as standard in the scope of delivery.

Powder containers are available for retrofitting in 4 colours: blue, orange, mint green, cerise

The colour of the powder container can be freely chosen. We recommend using a fixed system for assigning powders to the colour of the container.

3.1 Scope of delivery

The following items are included in the scope of delivery (possible variations due to country-specific requirements and/or import regulations):

Scope of delivery of the Supra Powder Jet Handpiece Set

for the versions

MyLUNOS 2034900050

Set: Supra / adapter: KaVo

MyLUNOS 2034900051

Set: Supra / adapter: Sirona

MyLUNOS 2034900052

Set: Supra / adapter: W&H

MyLUNOS 2034900053

Set: Supra / adapter: Bien Air

MyLUNOS 2034900054

Set: Supra / adapter: NSK

- Main body of MyLUNOS powder jet handpiece
- Supra nozzle
- Rinsing adapter for nozzle (blue)
- Rinsing adapter for nozzle (yellow)
- Blue powder container
- Tray for powder container
- O-ring set for corpus
- O-ring set for powder container
- Combination wrench
- Function tool
- Prophylaxis cannula
- Lunos Prophy Powder Gentle Clean
- Installation and operating instructions
- Quick start instructions

Scope of delivery of Pro powder jet handpiece set (with Supra and Perio nozzles)

for the versions

MyLUNOS 2034910050

Set: Pro / Adapter: KaVo

MyLUNOS 2034910051

Set: Pro / Adapter: Sirona

MyLUNOS 2034910052

Set: Pro / Adapter: W&H

MyLUNOS 2034910053

Set: Pro / Adapter: Bien Air

MyLUNOS 2034910054

Set: Pro / Adapter: NSK

- Main body of MyLUNOS powder jet handpiece
- Supra nozzle
- Perio nozzle
- Rinsing adapter for nozzle (blue)
- Rinsing adapter for nozzle (yellow)
- Blue powder container
- Orange powder container
- Tray for powder container
- O-ring set for corpus
- O-ring set for powder container
- Combination wrench
- Function tool
- Prophylaxis cannula
- LUNOS Perio Tips
- Lunos Prophy Powder Gentle Clean
- Lunos Prophy Powder Perio Combi
- Installation and operating instructions
- Quick start instructions

3.2 Optional items

The following optional items can be used with the device:

Supra nozzle 2034440000

Perio nozzle 2034430000

Rinsing adapter set (yellow, manual reprocessing) 2034100155

Prophylaxis Cannula (pcs 4) A070005850

Tray for powder container 2034100147

Retrofitting set Perio 2034900100

Lunos Prophy Powder Gentle Clean Orange (4 x 180g) CPZ620A2250

Lunos Prophy Powder Gentle Clean Spearmint (4 x 180g) CPZ630A2250

Lunos Prophy Powder Gentle Clean Neutral (4 x 180g) CPZ610A2250

EN

Lunos Prophy Powder Perio
Combi (4 x 100g) CPZ640A1950

3.3 Accessories

The following items are required for operation of the device, depending on the application:

LUNOS Perio Tips (40x) 2034100020
Blue powder container (1x) 2034100196
Blue powder container (2x) 2034100104
Orange powder container (1x) 2034100197
Orange powder container (2x) 2034100105
Powder container, mint green (1x) . 2034100245
Powder container, cerise (1x) 2034100261

3.4 Consumables

The following materials are consumed during operation of the device and must be ordered separately:

Lunos Prophy Powder Gentle
Clean Neutral (4x 180 g) CPZ610A2250
Lunos Prophy Powder Gentle
Clean Orange (4x 180 g) CPZ620A2250
Lunos Prophy Powder Gentle
Clean Spearmint (4x 180 g) CPZ630A2250
Lunos Prophy Powder Perio
Combi (4x 100 g) CPZ640A1950
LUNOS Perio Tips (40 piece) 2034100020

3.5 Wear parts and replacement parts

The following working parts need to be changed at regular intervals (refer to the "Maintenance" section):

Suction nozzle and O-ring for the
powder-air line (set) 2034100148
O-ring set for corpus
with thread-on assistance 2034100160
O-ring set for powder container . . . 2034100150
Rinsing adapter for nozzle 2034100161
Combination wrench 2034100188
Function tool 2034100154

Information about replacement parts is available from the portal for authorised specialist dealers at: www.duerrdental.net.

4 Technical data

General technical data of device		
Dimensions (W x H x D)	mm	50 x 70 x 230
Weight, empty	g	200
Water pressure	kPa (bar)	70 - 200 (0.7 - 2)
max. water throughflow volume at 1 bar	ml/min	70
Air pressure	kPa (bar)	250 - 400 (2.5 - 4)
Air throughflow volume at 3.5 bar	Ln/min	10 - 20
Chamber volume powder container	cm^3	40
Filling volume powder container	g	max. 18

Noise level		
Device in operation	dB(A)	77*

* In accordance with ISO 20608; measured in a noise-insulated room.

Ambient conditions during storage and transport		
Temperature	°C	0 to +25
Relative humidity	%	max. 95
Air pressure	hPa	700 - 1060

Ambient conditions during operation		
Temperature	°C	10 to 40
Relative humidity	%	20 to max. 75
Air pressure	hPa	700 - 1060

Turbine connections on treatment units
Sirona® R/F coupling
KaVo® MULTIflex Lux® Coupling
W&H® Roto Quick Lux® Coupling
NSK® MachLite / Phateleus Coupling
Bien-Air® Dental Unifix L® Coupling

® Registered trademarks of the corresponding company.

Prophy powder properties		
Grain size (average)	µm	14 to 70
Approved powder materials		Sodium bicarbonate, glycine, trehalose, erythritol

EN

4.1 Classification

MyLunos Pro / MyLunos Perio Tips

Classification	
Medical Device Class	IIa

4.2 Type plate

The type plate is located on the device packaging.

REF Order number

SN Serial number

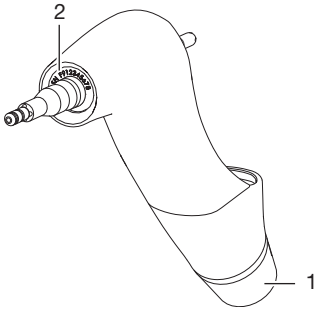

1 Order number on corpus
2 Serial number on corpus

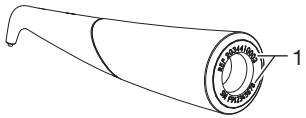

1 Order number and serial number on nozzle

4.3 ID number powder container

The identical ID number is located on the top and bottom parts of the powder container. The two parts belong together.
The ID number serves to document the reprocessing.
These parts may no longer be used after a certain number of reprocessing cycles / the end of the life span (see "11.1 Maintenance schedule").
The ID number is made up of the following marking: MMXXXX

MM	Date of manufacture: year and month
XXXX	Consecutive alphanumerical ID number

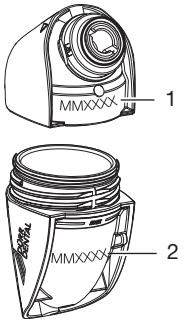

1 ID number powder container upper part
2 ID number powder container lower part

WARNING

Risk of injury

Exceeding the specified life span can result in defects, e.g. micro-fissures. Damaged powder containers can burst.

› Replace the powder container.

4.4 Evaluation of conformity

This device has been subjected to conformity acceptance testing in accordance with the current relevant European Union guidelines. This equipment conforms to all relevant requirements.

5 Operation

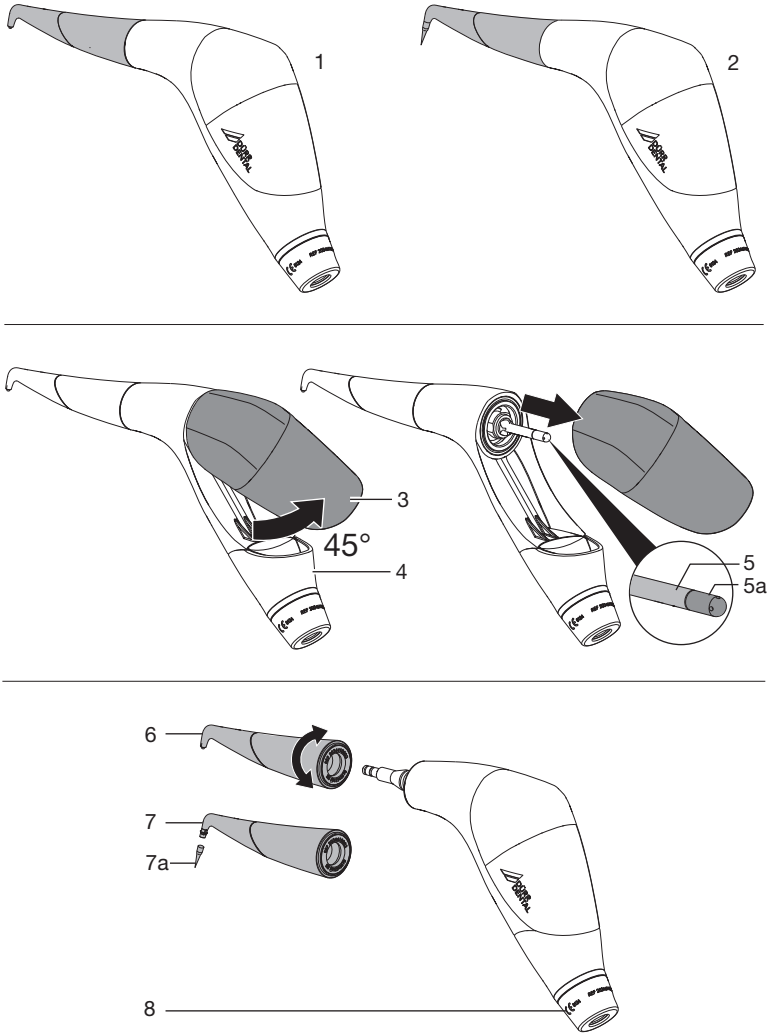

1 Powder jet handpiece MyLUNOS with Supra nozzle
2 Powder jet handpiece MyLUNOS with Perio nozzle
3 Powder containers in the colours blue, orange, mint green and cerise
4 Corpus
5 Powder-air line
5a Suction nozzle on the powder-air line
6 Supra nozzle
7 Perio nozzle
7a LUNOS single-use tip Perio Tip (for Perio nozzle)
8 Connection with an integrated coupling adapter for the turbine connection (treatment unit)

EN

The MyLUNOS is powder jet handpiece used for the removal of soft, supragingival plaques and discolouration as well as for the removal of subgingival biofilm.
The powder containers can be changed quickly and easily via a a bayonet connection; the nozzles are changed equally easily using a push-fit fastening and the Perio single-use tips via a combination wrench.
The handpiece is available for various turbine couplings. The models are differentiated by the various integrated coupling adapters.
For *supragingival* applications, the *Supra* powder jet handpiece is operated with prophy powders approved for use in this area (e.g. Prophy Powder Gentle Clean Neutral from Dürr Dental), as well as with a powder container and the Supra nozzle.
For *subgingival* applications, the *Perio* powder jet handpiece is operated with the prophy powder approved for use in this area (e.g. Prophy Powder Perio Combi from Dürr Dental), as well as with a powder container and the Perio nozzle.
For subgingival treatment, the Perio single-use tip (LUNOS Perio Tip) is placed on the Perio nozzle and subgingival biofilm is removed from gingival pockets.

The colour of the powder container can be freely chosen. We recommend using a fixed system for assigning powders to the colour of the container.

Usage

6 Preparing the device for treatment

6.1 Check the turbine connection

NOTICE

Damage to the device

Following use of an unsuitable turbine connection.

› Only operate the device using the correct turbine connection.

› Check the o-rings in the turbine coupling for their correct state.
Defective o-rings can cause damage to the device. Replace the o-rings if necessary.

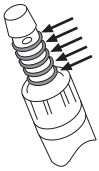

Fig. 1: Example Sirona coupling

› The powder jet handpiece is connected to the turbine connection of the treatment unit via an integrated adapter.
Established turbine connection (see "4 Technical data").

6.2 Check the o-rings

CAUTION

Personal injury

Check the O-rings for damage before every treatment

› Only operate the device with intact O-rings.

› Check the o-rings for damage before every treatment. Replace if necessary (see "11.9 Replace the o-rings on the corpus", or "11.8 Replace the dome valve and o-rings on the powder container").

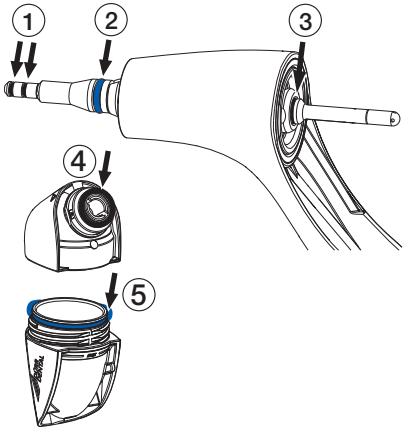

6.3 Connect the handpiece and dry the inner lumen.

✓ The treatment unit must be de-pressurised. Depressurise if necessary.

✓ Do NOT actuate the turbine foot switch.

✓ **Should the turbine have a light, it must be switched off.**

› The powder jet handpiece should be cleaned, disinfected and sterilised before initial use and after every treatment (see "10 Reprocessing").

› Blow the nozzle dry.

› Connect the nozzle to the corpus.

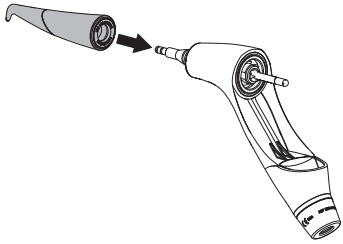

EN

NOTICE

Danger of blockage Moisture can cause the powder to clump together

Ensure that after reprocessing or flushing of the inner lumen, all residual moisture in the interior powder-air line line is removed. The air/powder line must be dry before the powder jet handpiece is used.

› Remove the residual moisture by blowing the air/powder line and blow dry for 10 seconds before using the handpiece.

› Inserting the function tool

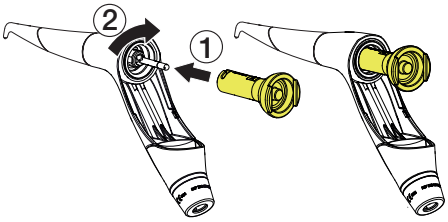

› Insert the turbine coupling in the powder jet handpiece coupling adapter.

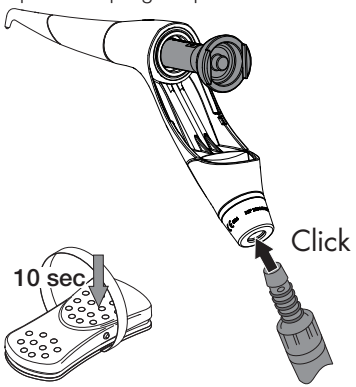

› Operate the device for around 10 seconds to remove any residual moisture.

6.4 Set the water throughflow volume and air pressure

WARNING

If the unit is operated without water this can cause a lot of mist to form, which in turn may lead to sensory confusion or breathing difficulties.

› Only operate the unit with a powder/water mixture.

It is easier to set the water flow rate when the powder container is empty. It is best to do this before first use.

› Hold the nozzle of the powder jet handpiece in the moist spittoon with a clearance of approx. 20 cm.

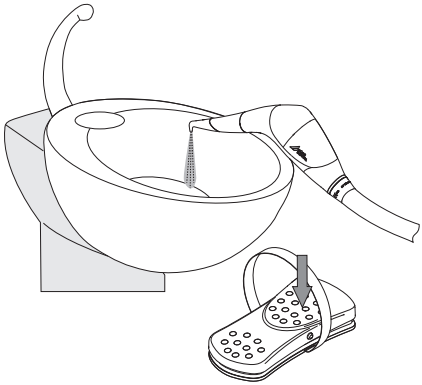

› If necessary, set the water flow volume on the turbine connection as required so as to ensure an equal, fine water flow.

› Set the air pressure on the treatment unit. Do not exceed the max. air pressure.
The treatment outcome varies depending on the setting of the air pressure:
The higher the air pressure, the greater the cleaning performance and the lower the polishing effect.
The lower the air pressure, the lower the cleaning performance and the lower the polishing effect.

6.5 Check the jet formation

Supra nozzle

› Check whether the nozzle openings are situated in a concentric pattern and that the jet pattern is concentric. An irregular jet pattern can be caused by blockage of the line. Remedy this if necessary.

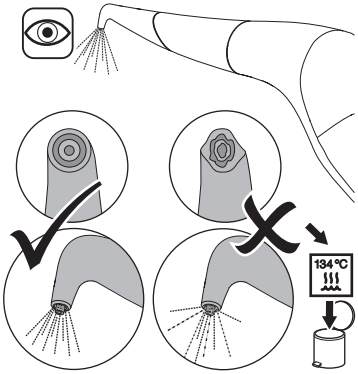

Perio nozzle

› After pushing on the Perio single-use tip, hold the nozzle in the spittoon and check whether the single-use tip has been correctly attached: The powder-air flow must emerge through the openings of the single-use tip. If the powder-air flow emerges anywhere else, it is possible that the single-use tip has not been correctly attached or that it is defective.
Correctly attach the single-use tip or change it if required.

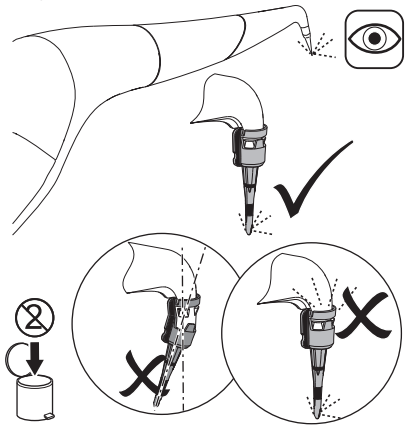

6.6 Fill the powder container

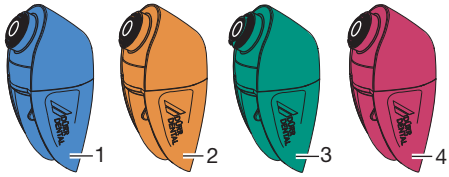

1 Blue powder container
2 Orange powder container
3 Mint green powder container
4 Cerise powder container

Every powder container can be used with every type of prophy powder.

TIP

We recommend the following approach for working with the **different** prophy powders:

Choose the matching colour of powder container for each of the Lunos® prophy powders – that way you can tell at a glance which powder is which.

The safe valve closure allows the powder containers to be filled in advance.

In the process, the storage trays can be combined as required to enable flexible filling and storage (see "6.7 Possible applications of the powder container rest") of the powder containers.

EN

Remove and open the powder container

› Pivot the powder container through 45° then remove.

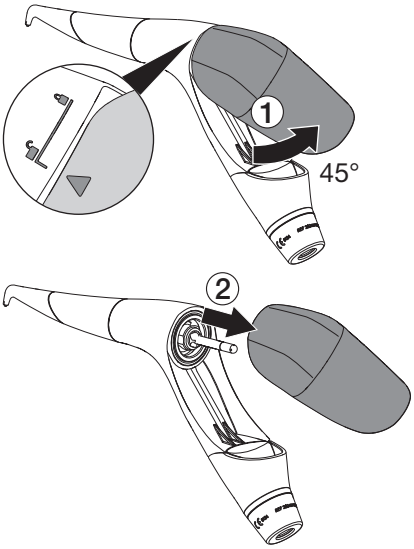

› Rotate the upper part of the powder container through 180° then remove.

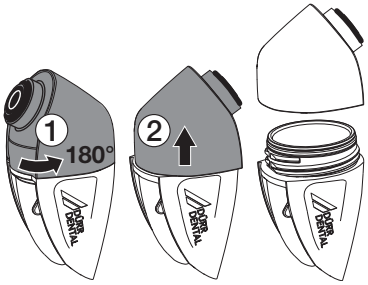

› Remove any residual powder. Blow out the upper and lower parts of the container with compressed air.

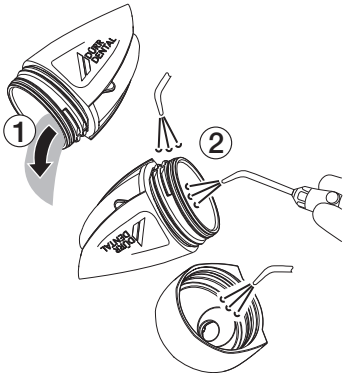

› Check whether the powder container is dry.

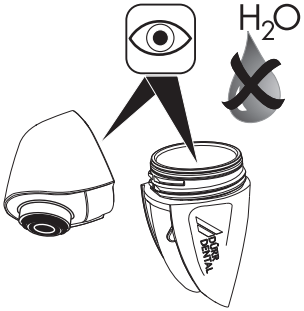

› Check the O-rings for damage.

› Check the dome valve for damage (see "11.7 Check the dome valve").

CAUTION

Risk of injury

Damaged powder containers can burst.

› Replace damages powder containers.

› Check the powder container for micro-fissures and use a new powder container if necessary.

If a part of the powder container is defective, it is necessary to change both parts. Both parts have the same ID number (see "4.3 ID number powder container").

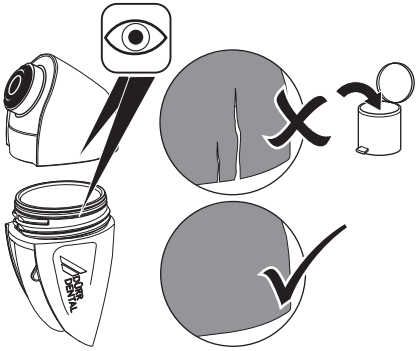

Fill the powder container

We recommend working with Lunos® prophy powder Gentle Clean (only supragingival) or Lunos® prophy powder Perio Combi (supragingival and subgingival).
When using other powders, the properties of the powder materials and the grain size will need to be considered, see "4 Technical data".
Before filling the powder container, you must first check that the individual components are free of powder. Clean them with compressed air if necessary. This helps to avoid blockages.

NOTICE

Moisture can cause the powder to clump together

› Check that the powder container is dry before filling it. Blow dry if necessary

› Blow the powder container dry.

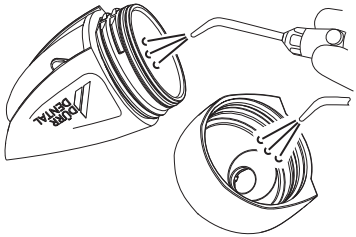

› Blow the dome valve in the powder container dry and clean.

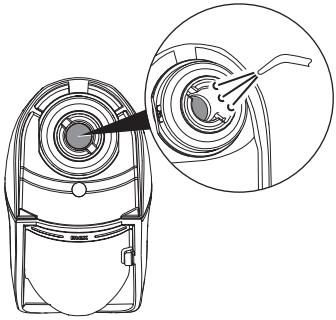

› Blow the suction nozzle dry.

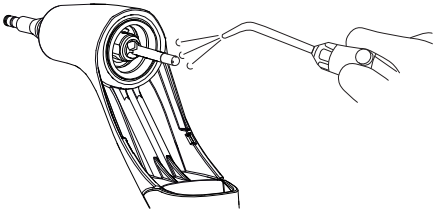

› Check that the suction nozzle is dry.

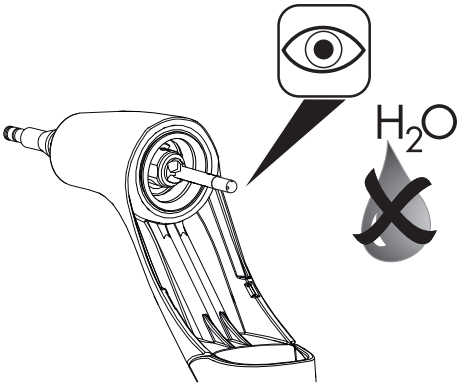

EN

› Fill the jet powder in the lower part of the container.
Fill slowly to prevent the development of dust.
Comply with the maximum filling quantities.
Do not exceed the max. filling quantities.

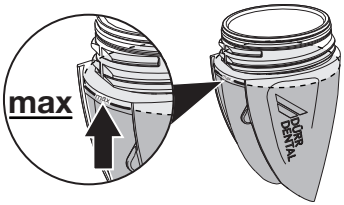

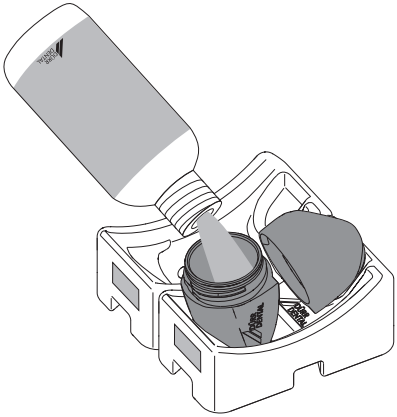

The best results are achieved when the **powder container is filled to the maximum**.

› Before screwing tight, remove any residual powder on the thread of the lower part of the container and on the bayonet connection of the sealing cap.
› Close the powder container. Ensure that the powder container has been closed correctly to prevent powder from escaping.

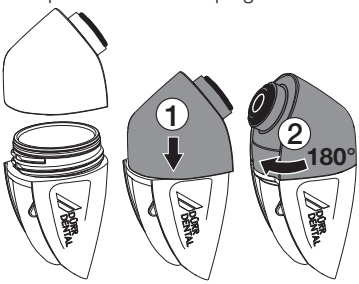

› Close the powder container to protect the powder from moisture.

Insert the powder container

› After removing the powder jet handpiece from the washer-disinfector and before inserting the powder container, first insert the function tool.

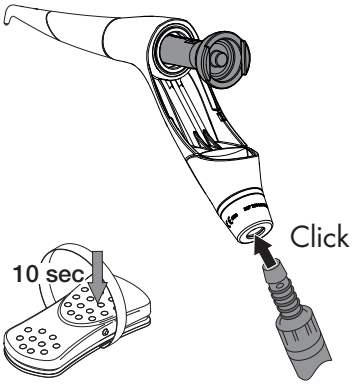

› Operate the device 1x for 10 sec. with the function tool inserted.
This enables removal of the residual moisture in the powder-air line.

› Slide the powder container onto the powder-air line, then turn until its end position has been reached. Refer also to the marking.

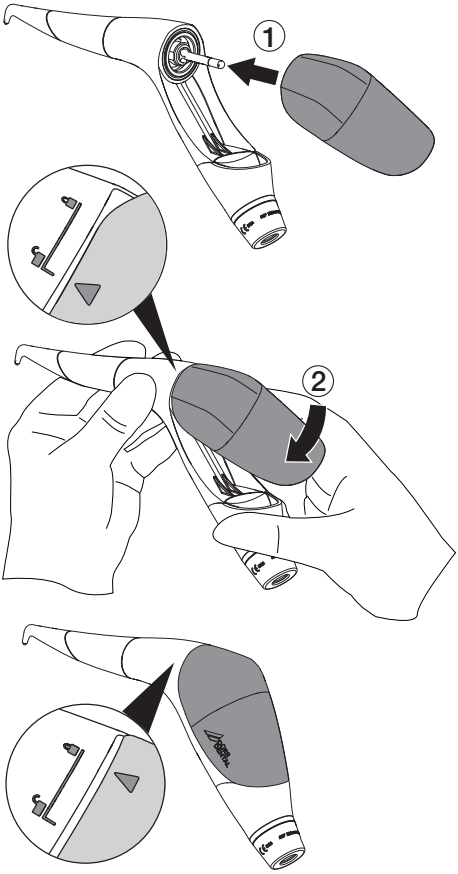

6.7 Possible applications of the powder container rest

Preparations for the treatment and "storage" can be simplified using a number of rests for the powder container (combined if required).

The rests are combined using the connection piece in the form of a tooth on the underside of the rest.

› Remove the tooth and insert as required.

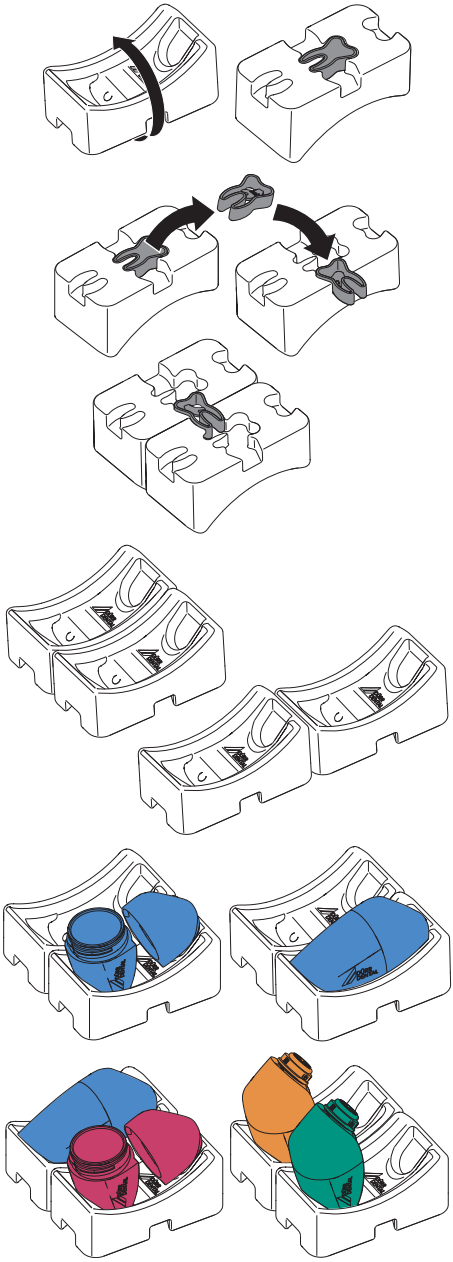

EN

7 Precautionary measures

Wear protective gloves.

Wear protective goggles.

Use a mask.

Use protective clothing.

CAUTION

Risk of infection from contaminated products

Risk of cross contamination

› Reprocess the product correctly and promptly before its first use and after every subsequent use.

WARNING

Eye injuries

The air/powder flow can enter the eye by mistake.

› The operator, assistant and the patient should wear eye protection during the treatment.
Never point the nozzle at a person either before or after treatment.
Observe the run-after time of the air/powder flow! Do not remove the nozzle from the mouth until no air/powder flow is visible.

WARNING

Risk of infection

To minimise the danger of infection and to avoid the inhalation of aerosols and powder

› Wear mouth and nose protection.

NOTICE

Danger of soiling

The treatment can damage the patient's contact lenses or glasses.

› Remove contact lenses / glasses during the treatment.

NOTICE

Danger of soiling

The patient clothing can become soiled.

› Cover the clothing with a cloth during treatment.

8 Treatment

Wear protective gloves.

Wear protective goggles.

Use a mask.

Use protective clothing.

CAUTION

Risk of allergic reaction

Patients with a corresponding predisposition can react sensitively to the powder.

› Stop the treatment immediately if any allergic reaction is observed.

NOTICE

Danger of blockage Moisture can cause the powder to clump together

Ensure that after reprocessing or flushing of the inner lumen, all residual moisture in the interior powder-air line line is removed. The air/powder line must be dry before the powder jet handpiece is used.

› Remove the residual moisture by blowing the air/powder line and blow dry for 10 seconds before using the handpiece.

The device should be maintained at room temperature during treatment. Do not use a warm device, e.g. taken directly from the steam steriliser after reprocessing.

In case of blockage, see "11.4 Free from blockages".

✓ Cover the patient's lips with Vaseline.

✓ Perform mucous membrane antisepsis for patients with an increased risk of infection.

✓ **Should the turbine have a light, it must be switched off.**

› Position the small saliva cannula to suck from under the tongue.

› Aspirate the impacting powder stream using the prophylaxis cannula or the large universal cannula.

› The handpiece and the suction cannula should be guided by the same person. Only in this way is it possible to ensure the best guidance of the suction cannula to the tip of the nozzle.

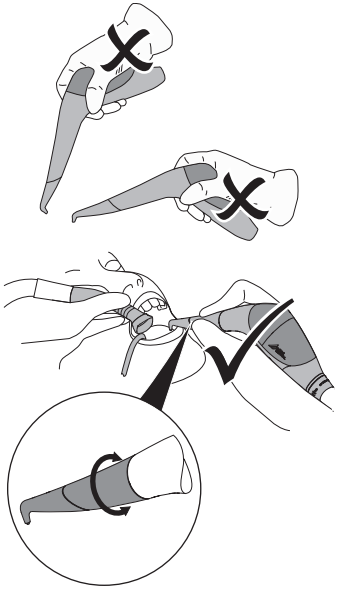

EN

8.1 Treatment with the powder jet handpiece Perio

Using the handpiece with the Supra nozzle fitted

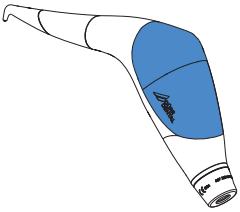

WARNING

The development of emphysema

Do not expose soft tissue to the powder flow during the Supra application as this could result in emphysema formation in the tissue.

› Do not direct the nozzle tip directly on the gums, the tongue or in the gum pockets.

NOTICE

Damaging restorations

The jet powder could cause damage to restorations such as fillings, crowns and bridges

› Do not direct the powder flow towards restorations.

› Actuate the foot switch and remove the plaque with circular motions.
Move the tip of the nozzle in circular motions with a clearance of 3 - 5 mm from the tooth surface.

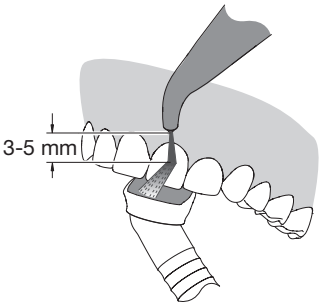

› Spray the tooth from the gum pocket to the cutting edge with an angle of 30 to 60 degrees.

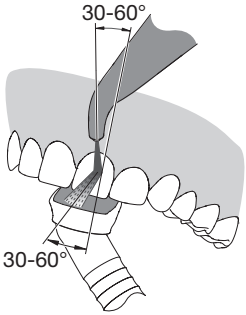

› It air/powder flow must not be misdirected otherwise it could damage the gingiva or result in the development of an emphysema (air blown into the soft tissue).

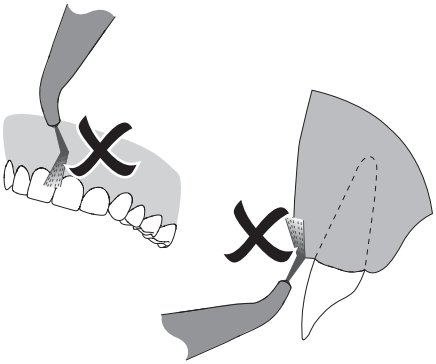

› Release the foot switch and wait until the jet stops. Allow for this delay, blow into the suction cannula if necessary.
For the next steps, refer to "8.3 Precautionary measures after treatment".

8.2 Treatment with the powder jet handpiece Perio

Use the handpiece with the Perio nozzle fitted

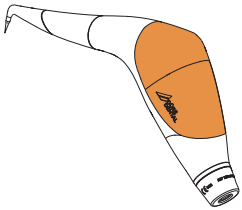

WARNING

Risk of cross contamination

› A new and sterile "LUNOS Perio single-use tip must be fitted before every treatment.

WARNING

Risk of aspiration

The mechanical safety concept serves to avoid unintentional detachment of of the single-use tip "LUNOS Perio Tip" from the nozzle.

› A new single-use tip must be fitted before every treatment.

CAUTION

Gingivitis

Incorrectly stored "LUNOS Perio Tips" single-use tips could be unsterile.

› For correct storage, see "LUNOS Perio Tips" type plate

› Take a new single-use tip "LUNOS Perio Tip" from the package. Check that the packaging of the tip is undamaged and that the tip is within its expiry date.
If the product is used after its expiry date, sterility can no longer be ensured.

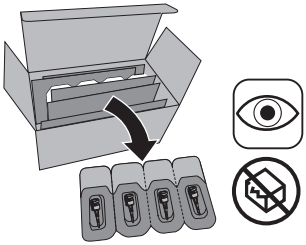

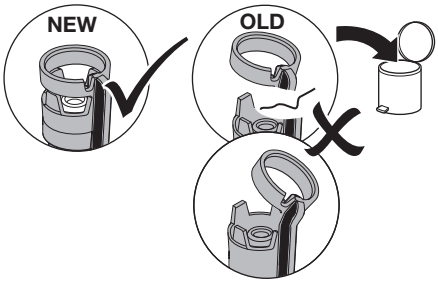

EN

WARNING

Risk of injury

Parts could become detached from the nozzle if the "LUNOS Perio Tip" single-use tip is not fitted properly. Aspiration of small parts is possible.

› Check the single-use tip for correct seating.

› Push on the single-use tip.

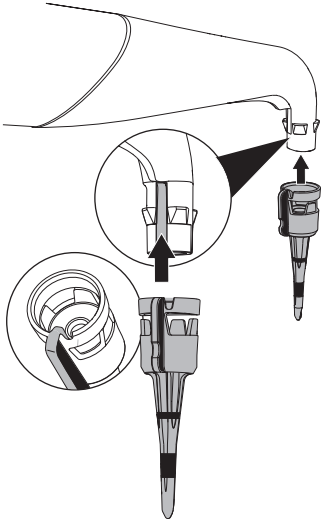

› Check the single-use tip for correct seating.

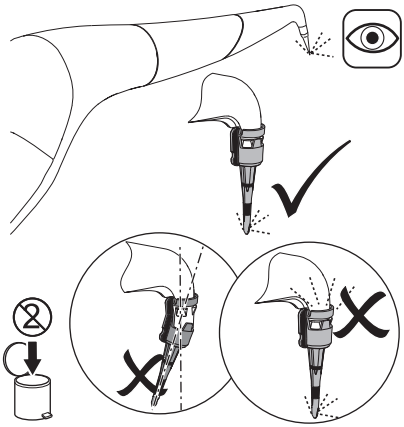

WARNING

The development of emphysema

The soft tissue can be damaged as a result of careless handling.

› Carefully slide the single-use tip "LUNOS Perio Tip" into the gingival pocket. In order to avoid the risk of an emphysema as far as possible, it must be ensured that there is still 3 mm of bone substance at the apex.

› Observe the probing depth according to the marking (markings compliant with the WHO probe)

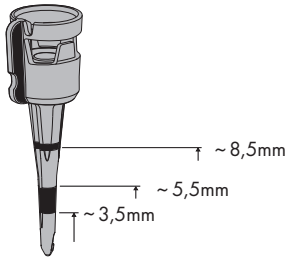

› Insert the single-use tip "LUNOS Perio Tip" into the gingival pocket. The depth of penetration depends on the depth of the gingival pocket.

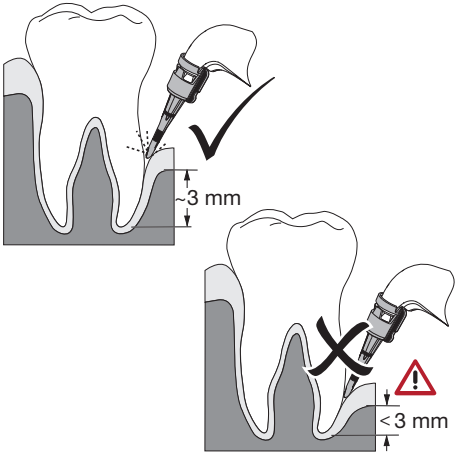

› When the single-use tip is in the gingival pocket, press the foot switch for 5 seconds.

› Use circular motions to remove subgingival biofilm from the tooth surfaces.
In contrast to the Supra nozzle, cleaning of gingival pockets with a probing depth of more than 5 mm is possible.

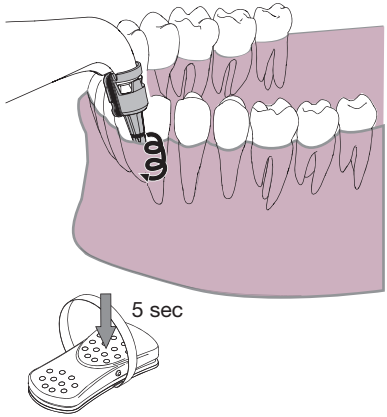

› Release the foot switch and wait until the jet stops. Allow for this delay.

› Withdraw the single-use tip "LUNOS Perio Tip" from the gingival pocket and treat the next gingival pocket. For the next steps, refer to "8.3 Precautionary measures after treatment".

8.3 Precautionary measures after treatment

› The powder-air jet keeps flowing or a few seconds after the foot switch has been released. Do not draw the handpiece over the face or clothes of the patient during this time.
We recommend retaining the nozzle tip in the suction cannula as long as it is in the patient mouth and until the spray has stopped.

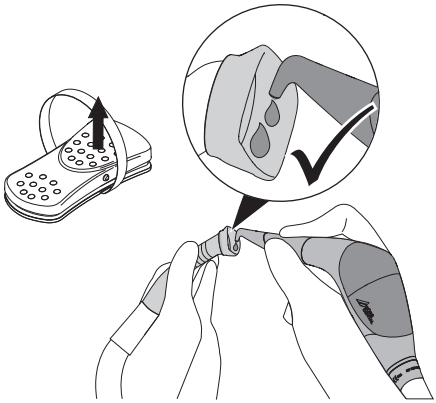

8.4 Place down the handpiece

› Insert the handpiece in the treatment unit sheath so that the outlet aperture is facing downwards.

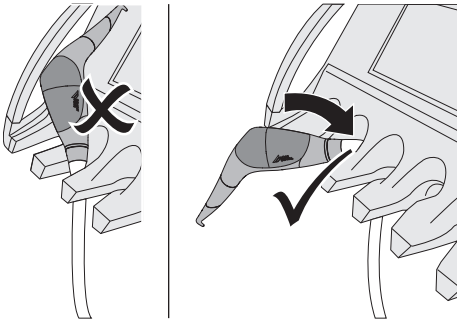

EN

9 After every treatment

9.1 Removing the single-use tip "LUNOS Perio Tip"

We recommend the following options for removing the single-use tip:
- Combination wrench
- Sharps container
- Dental flat pliers

WARNING

Material failure due to steam sterilisation

The single-use tip "LUNOS Perio Tip" cannot be steam-sterilised and must be removed after every treatment.

› Single-use tips must only be used once.

› LUNOS Perio Tips must only be used once!

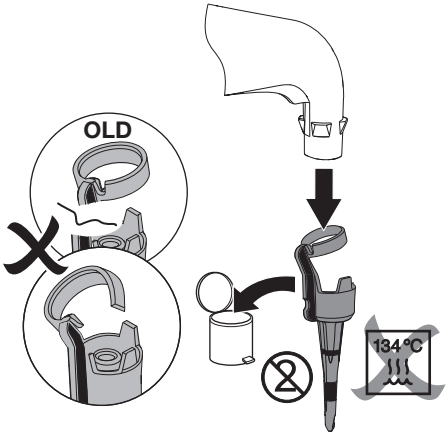

Combination wrench (Dürr Dental)

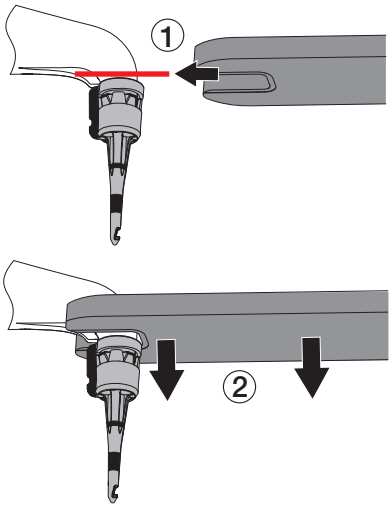

Sharps container (e. g. Medibox, from Braun)

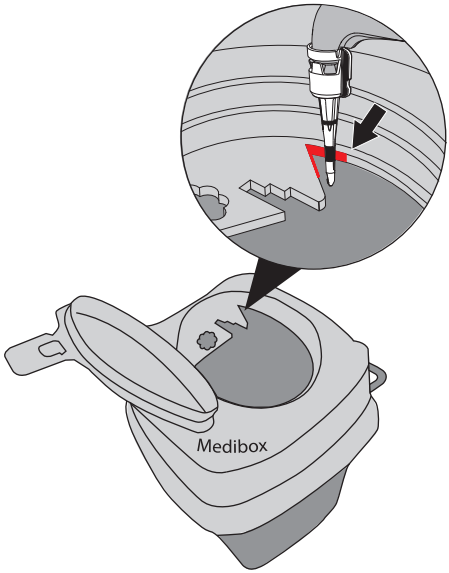

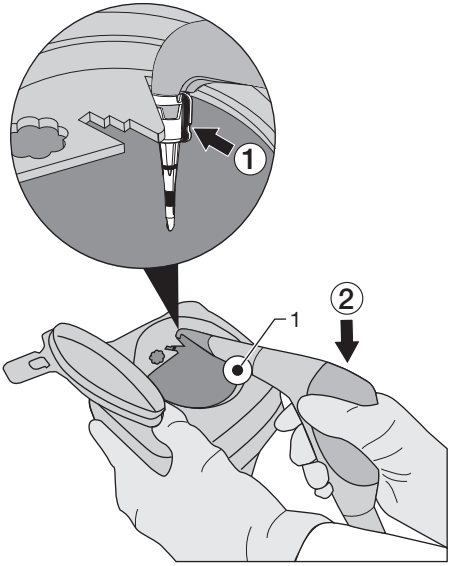

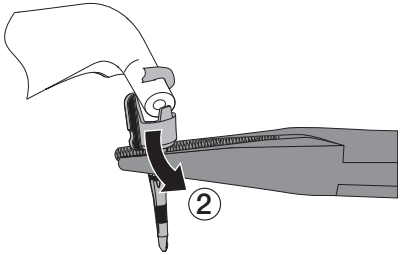

1 Pivot

Dental flat pliers

› Ensure that you use the flat pliers correctly, see 1 - 3

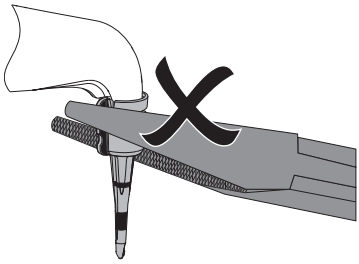

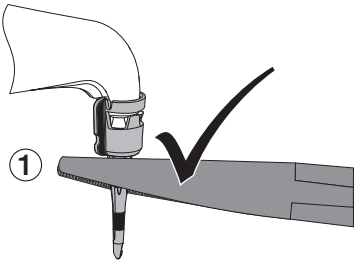

EN

9.2 Check the rinsing adapter

› Check that the O-rings are properly seated on the rinsing adapters.
The rinsing adapters must be replaced if the O-rings are lost.

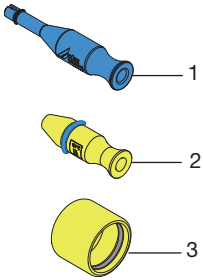

1 Rinsing adapter for the nozzle (blue) for cleaning after ever treatment and following blockage
2 Rinsing adapter for nozzle (yellow) for use during reprocessing
3 Rinsing adapter for nozzle (yellow) for the corpus, for use during reprocessing
4 Please continue with the reprocessing of the device components and accessories as described in "10 Reprocessing".

9.3 Removal of powder residue from the nozzle

› Remove the powder container, open it and empty if necessary.

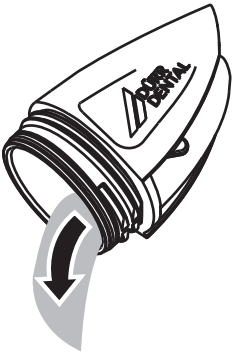

› Remove the nozzle with a slight twist movement.

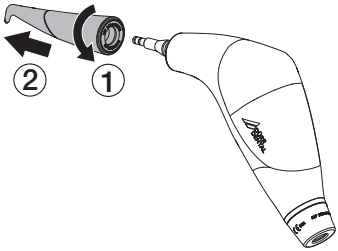

› Push the rinsing adapter (blue) onto the nozzle and use a 10 ml disposable pipette to flush water through the air/powder line and remove any powder residue.

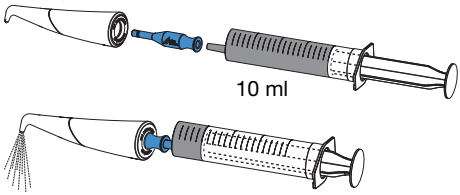

› Following blockages (see "11.4 Free from blockages").
› Place the function tool on the bayonet connection for the powder container.
› Attach the yellow rinsing adapter for the main body and use a 20 ml disposable pipette to rinse the air/powder line and remove any powder residue.

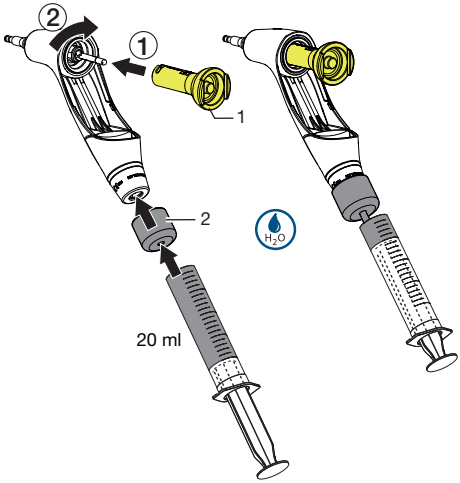

› Send all reprocessable device components (main body, nozzles, powder container) for reprocessing. (See "10 Reprocessing")

EN

10 Reprocessing

10.1 Risk analysis and categorisation

A risk analysis and categorisation of medical products often used in dentistry must be performed before their reprocessing by the operator. Comply with all national directives, standards and specifications such as e. g. the "Recommendations from the Commission for Hospital Hygiene and Infection Prevention".
Accessories of the medical device are also subject to reprocessing.
Classification recommendation given intended use of the product: **semi-critical B to critical B**
The operator is responsible for correct classification of the medical products, defining the reprocessing steps and performing the reprocessing.

10.2 Preparation process in accordance with ISO 17664

Carry out the procedure for reprocessing after every treatment in accordance with the preparation process set out in ISO 17664.

Important information!

The reprocessing notes in accordance with ISO 17664 have been independently tested by Dürr Dental for the preparation of the device and its components for their reuse.

The person conducing the reprocessing is responsible for ensuring the reprocessing performed using the equipment, materials and personnel achieves the desired results. This requires validation and routine monitoring of the reprocessing process. Any deviation from the instructions described herein by the staff preparing the equipment could lead to lower effectiveness and possible negative consequences: these lie solely with the staff responsible.
Frequent reprocessing has little effect on the device components. The end of the product life cycle is especially influenced by the amount of wear and tear or damage resulting from its use.

The use of soiled, contaminated and damaged components is at the sole responsibility of the person performing the reprocessing and the operator.

The reprocessing procedure was validated as follows:

- **Pre-cleaning**
  - FD 322 Premium Wipes (Dürr Dental)
- **Manual cleaning**
  - ID 213 Instrument disinfection (Dürr Dental)
- **Manual disinfection**
  - ID 213 Instrument disinfection (Dürr Dental)
- **Automatic cleaning and disinfection**
  Was performed in accordance with ISO 15883 with tested efficacy.
  - Pre-cleaning with FD 322 Premium Wipes (Dürr Dental)
  - Cleaning agent: Neodisher MediClean, washer-disinfector: G 7836 CD (Miele), programme:
    D-V-MEDICLEAN at 90°C (5 min)
- **Steam sterilisation**
  was performed in accordance with ISO 17665 with the fractionated vacuum procedure.
  Sterilise the parts for sterilisation, e.g.
  - 20 minutes at 121°C
  - 4 minutes at 270°F
    (also valid for 5 minutes at 134°C)

10.3 General information

NOTICE

Equipment damage due to unsuitable products

Oils and care products containing oil will damage the device.

› The handpiece must not be maintained with oil or with a care system that contains oil.

› Comply with all national directives, standards and specifications for the cleaning, disinfection and sterilisation of medical products as well as the specific specifications for dental practices and clinics.

› Clean and disinfect all parts a maximum of two hours after use.

› Comply with the specifications (see "10.6 Manual cleaning, intermediate rinsing, disinfection, final rinse, drying" and "10.7 Automatic cleaning, intermediate rinsing, disinfection, final rinse, drying") when selecting the cleaning and disinfectant agents to be used.

› Comply with the concentration, temperature, residence time and post-rinsing specifications issued by the manufacturer of the cleaning and disinfectant agent.

› Only use cleaning agents that are non-fixing and aldehyde-free and display material compatibility with the product.

› Only use disinfectants that are aldehyde-free and display material compatibility with the product.

› Do not use any rinse aid (danger of toxic residue on the components).

› Only use freshly-produced solutions.

› Only use distilled or deionised water with a low bacterial count (at least drinking water quality) that is free from facultatively pathogenic microorganisms (e.g. legionella bacteria).

› Use clean, dry, oil and particle-free compressed air.

› Do not exceed temperatures of 138 °C.

› Subject all devices used (ultrasonic bath, cleaning and disinfection device (CD), sealing device, steam steriliser) to regular maintenance and inspections.

EN

10.4 Preparation at the operating location

Wear protective gloves.

Wear protective goggles.

Use a mask.

Use protective clothing.

WARNING

Risk of infection from contaminated products

Danger of cross contamination

› Reprocess the product correctly and promptly before its first use and after every subsequent use.

› Transport the device from the treatment location to the reprocessing location in such a way as to protect against contamination.

› Remove course organic and inorganic soiling with a disinfectant cloth.

WARNING

Material failure due to steam sterilisation

The single-use tip "LUNOS Perio Tip" cannot be steam-sterilised and must be removed after every treatment.

› Single-use tips must only be used once.

› Check that the O-rings are properly seated on the rinsing adapters (see).
The rinsing adapters must be replaced if the O-rings are lost or damaged.

10.5 Manual pre-cleaning

Do not leave the pre-cleaning more than 15 minutes after the unit has been used.

› The work steps set out in "9.3 Removal of powder residue from the nozzle" must be carried out prior to pre-cleaning.

› Completely wipe down the external surfaces with FD 322 Premium Wipes for at least one minute until they are visually clean. Make sure that the surfaces are sufficiently moistened.

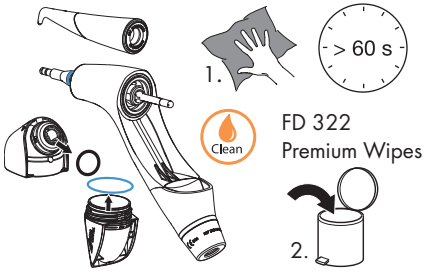

› Note the action time of the cleaning agent.

Preparation of powder jet handpiece

› Remove the powder container, open it and empty if necessary.

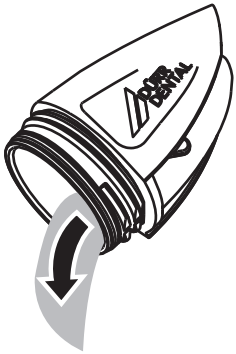

› Pull off the O-ring from the upper part and lower part of the powder container.

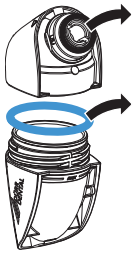

10.6 Manual cleaning, intermediate rinsing, disinfection, final rinse, drying

A combined cleaning and disinfectant agent is required for manual cleaning and disinfection. It must have the following properties:

- certified, possibly virucidal efficacy (DVV/RKI, VAH or European Standards)
- without chlorine, without solvent, no strong alkaline solutions (pH > 11), no strong oxidising agents

For further information, see: "10.3 General information".

Cleaning

› Attach the yellow rinsing adapter to the nozzle and rinse through 1x with a combined cleaning agent and disinfectant using a 20 ml disposable syringe.

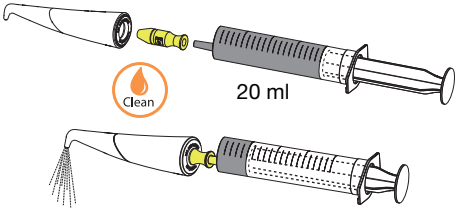

› Attach the function tool (1) to the bayonet connection for the powder container.
Attach the yellow rinsing adapter (2) for the main body and rinse it through at least 1x with a combined cleaning agent and disinfectant using a 20 ml disposable syringe.

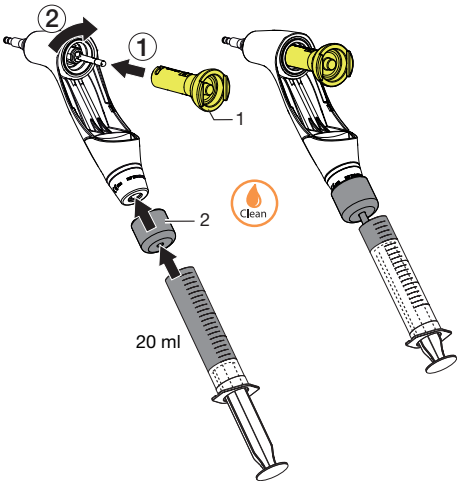

1 Function tool
2 Rinsing adapter for the corpus

› Remove all rinse adapters.

› Afterwards place the individual parts in a cleaning and disinfecting bath (non-fixing, aldehyde-free, see "10.3 General information") for the stated reaction time (max. 2 hours). Make sure that all parts are covered.

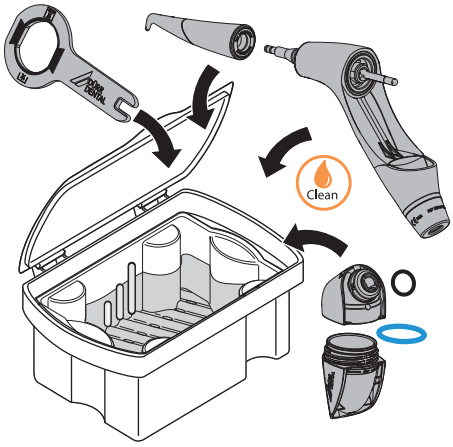

EN

› In the disinfectant bath, brush all exterior and interior surfaces completely with a soft hygienic brush.
› Comply with the action times of the cleaning agent and disinfectant.

Intermediate rinsing

After the action time prescribed by the manufacturer:

› Rinse all components under water for min. 1 minute (temperature < 35 °C).

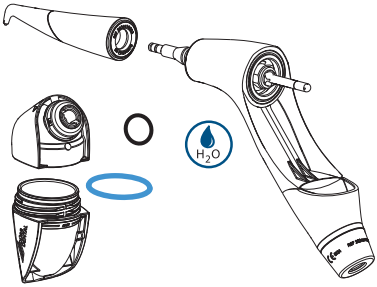

› Attach the yellow rinsing adapter to the nozzle and rinse at least 1x with water using a 20 ml disposable syringe.

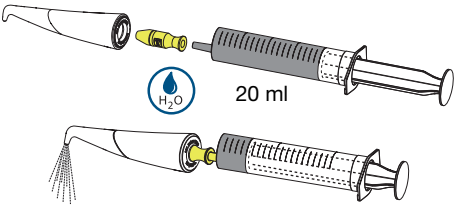

› Place the function tool (1) on the bayonet connection for the powder container.
Attach the yellow rinsing adapter (2) for the main body and rinse through with water at least 1x using a 20 ml disposable pipette.

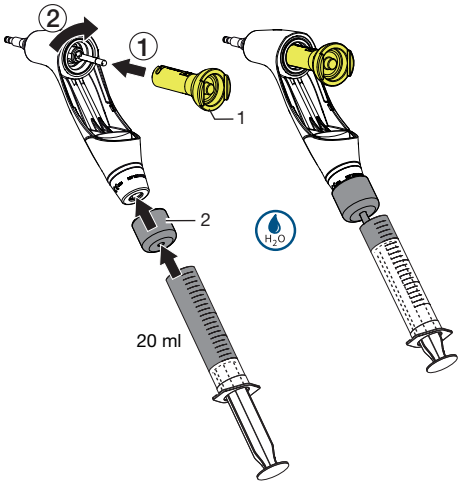

1 Function tool
2 Rinsing adapter for the corpus

Disinfection

› Attach the yellow rinsing adapter to the nozzle and rinse through 1x with a combined cleaning agent and disinfectant using a 20 ml disposable syringe.

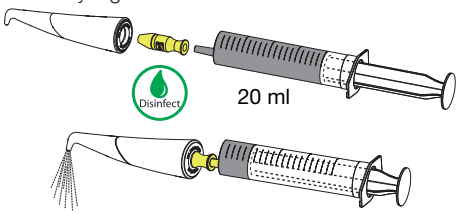

› Attach the function tool (1) to the bayonet connection for the powder container.
Attach the yellow rinsing adapter (2) for the main body and rinse it through at least 1x with a combined cleaning agent and disinfectant using a 20 ml disposable syringe.
.

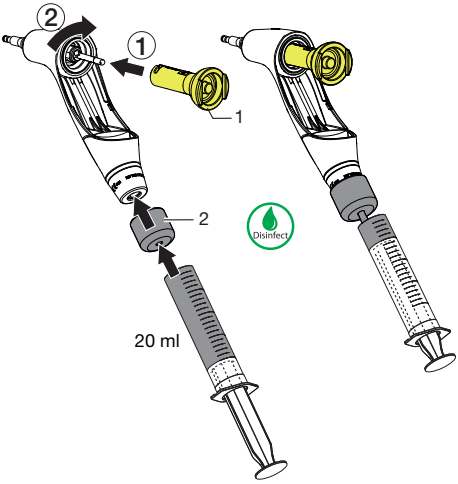

1 Function tool
2 Rinsing adapter for the corpus

› Remove all rinse adapters.

› Afterwards place the individual parts in a cleaning and disinfecting bath (non-fixing, aldehyde-free, see "10.3 General information") for the stated reaction time (max. 2 hours). Make sure that all parts are covered.

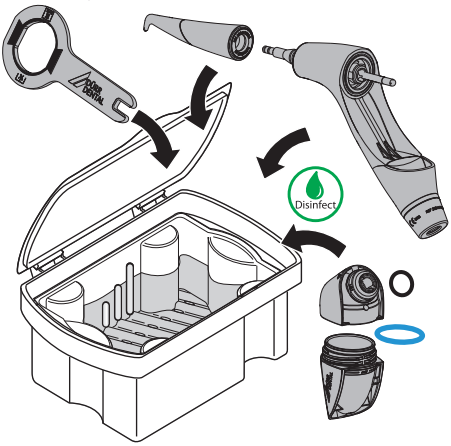

› Comply with the action times of the cleaning agent and disinfectant.

Final rinse

› Rinse all components under demineralized water for at least 1 minute (temperature < 35°C).

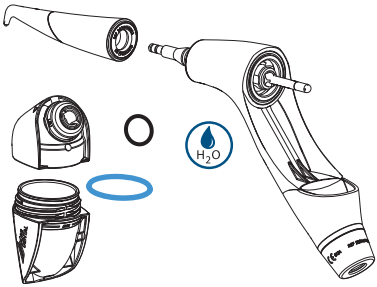

› Attach a rinsing adapter to the nozzle and rinse at least 1x with demineralized water using a 20 ml disposable syringe.

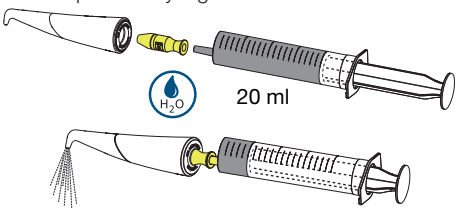

EN

› Place the function tool (1) on the bayonet connection for the powder container.
Attach the yellow rinsing adapter for the main body (2) and rinse through with demineralized water at least 1x using a 20 ml disposable syringe.

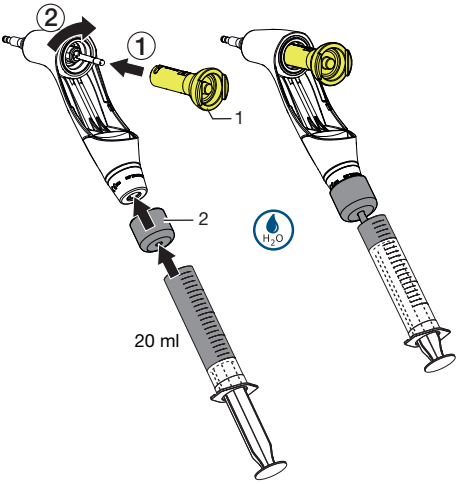

1 Function tool
2 Rinsing adapter for the corpus

Drying

› If necessary, re-dry at a clean location using a hygienic, lint-free cloth.
› Blow dry the components with compressed air in a clean location.
› Blow the nozzle dry and clean.

› Blow the suction nozzle dry and clean.

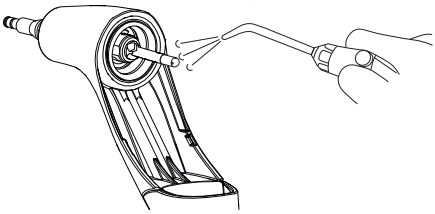

› Blow the dome valve in the powder container dry and clean.

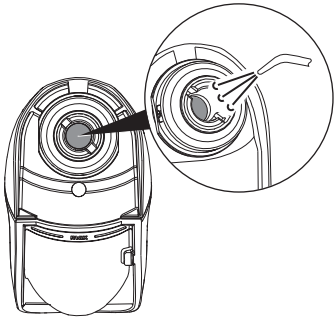

10.7 Automatic cleaning, intermediate rinsing, disinfection, final rinse, drying

Selection of the washer-disinfector

Automatic cleaning and disinfection requires a washer-disinfector with the following properties and validated processes:
– Corresponds to and tested in accordance with ISO 15883
– Certified program for thermal disinfection (A_0 value ≥ 3000 or at least 5 minutes at 93°C)
– Programme is suitable for the components and provides sufficient rinsing cycles.
For more information: "10.3 General information".

Selection of the cleaning agent automatic

The following properties are required:
– Material compatibility with the product
– Corresponds with the manufacturer's specifications of the CD

For further information, see: "10.3 General information".

Pre-cleaning

› Pre-clean the unit a max. of 15 minutes after use.
› The work steps set out in "9.3 Removal of powder residue from the nozzle" must be carried out before the unit is reprocessed in the machine.

› Completely wipe down all external surfaces with FD 322 Premium Wipes for at least one minute until they are visually clean. Make sure that the surfaces are sufficiently moistened.

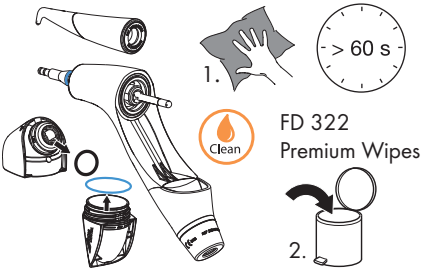

› Note the action time of the cleaning agent.

Cleaning and disinfection

› Attach the nozzle to the special mountings for transmission instruments (e.g. Miele: ADS 3 approx. 22 mm Ø or MELAG universal adapter for MELAtherm 10, item no. 73904) in the washer-disinfector.

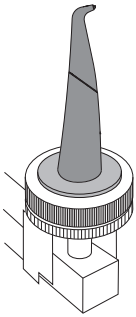

› Place the function tool on the bayonet connection for the powder container and rotate in.

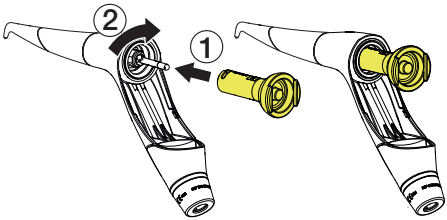

› Then attach the main body to the special mountings for transmission instruments (e.g. Miele: ADS 3 approx. 22 mm Ø or MELAG tip adapter for MELAtherm 10, item no. 80760) in the washer-disinfector.

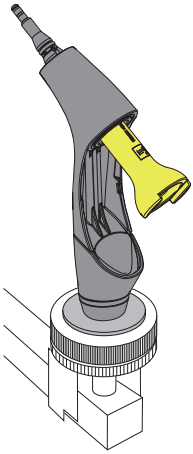

› Place the upper and lower part of the powder container and the black and blue O-rings in the small parts baskets. The parts should not come into contact with each other and their openings should be pointing downwards. Make sure there are no hidden areas that are missed by the rinsing process.

› Secure the components with a suitable fixture of the cleaning and disinfection unit.

Drying

› If necessary, re-dry at a clean location using a hygienic, lint-free cloth.

› Blow dry the components with compressed air in a clean location.

› Blow the nozzle dry and clean.

› Blow the suction nozzle dry and clean.

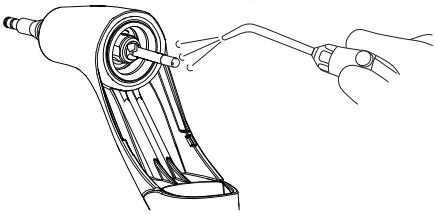

EN

› Blow the dome valve in the powder container dry and clean.

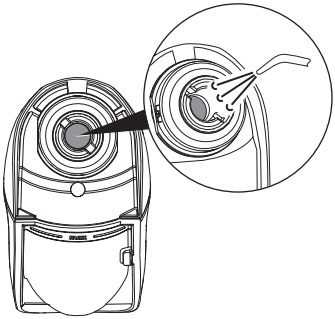

10.8 Check for function

› After the end of the cleaning and disinfection cycle, check the components for any residual soiling and residual moisture. If necessary, repeat the cycle.

› If necessary, replace any damaged parts.

Operate the unit for around 10 seconds with the function tool inserted to remove any residual moisture from the main body and nozzle ("6.3 Connect the handpiece and dry the inner lumen.").

› The parts should be packaged as soon as possible after drying and checking.

10.9 Steam sterilising

Packing

WARNING

Endangering the sterilisation success

The fitted components are not reached by the steam and as such are not sterilised.

› Do not fit the components before packaging.

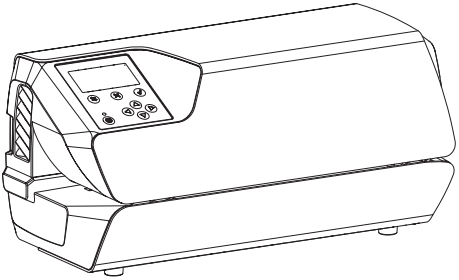

For packaging of the components, use only sterile barrier systems made of transparent paper film that are approved for use in steam sterilisation according to the manufacturer information. This includes:

– Temperature resistance up to 138°C
– Standards ISO 11607-1/2
– Applicable parts of the series of standards EN 868

The sterile barrier system must be large enough. Once it is loaded, the sterile barrier system must not be under any strain.

Steam sterilising

WARNING

Incorrect sterilisation reduces effectiveness and can damage the product.

› Only steam sterilisation is permitted.

› Comply with the specified process parameters.

› Comply with the manufacturer‘s instructions regarding use of the steam steriliser.

› Do not use any other methods.

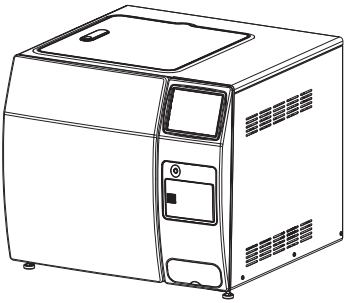

Requirements placed on the steam steriliser:

- Corresponds to EN 13060 or EN 285 and/or ANSI AAMI ST79
- Suitable programme for the products listed (e. g. with hollow bodies, fractionated vacuum procedure in three vacuum steps)
- Sufficient product drying
- Validated process in accordance with ISO 17665 (valid IQ/OQ and product-specific performance appraisal (PQ))

Perform the following steps:

› Sterilise the parts for sterilisation(at least 20 minutes at 121°C, at least 4 minutes at 270°F or at least 5 minutes at 134°C).
Do not exceed 138°C.

Marking

› Mark the packaged, treated medical product in such a way as to ensure safe application.

10.10 Issue clearance for the parts for sterilisation

The reprocessing of the medical products ends with the documented clearance for storage and renewed use.

› Document the clearance of the medical product after reprocessing.

10.11 Storing parts for sterilisation

› Comply with the stated storage conditions:
- Store the parts protected against contamination
- Dust-protected, e.g. in a locked cabinet
- Protected against moisture
- Protected against excessive temperature fluctuations
- Protected against damage

Packaging for a sterile medical device can suffer damage as a result of a particular incident and the passage of time.
Potential external contamination of the sterile barrier system should be taken into account in terms of aseptic preparation when establishing the storage conditions.

EN

11 Maintenance

To ensure proper operation and maintain the service life of the appliance, it is necessary to carry out cleaning and maintenance work diligently.
Inadequately or not carried out maintenance work can cause premature defects that are not covered by the warranty.

Wear protective equipment to avoid any risk of infection (e.g. liquid-tight protective gloves, protective goggles, face mask).

11.1 Maintenance schedule

Service interval	Maintenance work
Check before each treatment	– Check the jet formation for homogeneity – Check the powder container for damage (fissures) – O-rings for wear – Dome valve for wear – Check the single-use tip "LUNOS Perio Tip" for correct seating
After every treatment	– Clean and disinfect components. – Dispose of the single-use tip "LUNOS Perio Tip" after single use.
Before every reprocessing	Check that the O-rings are properly seated on the rinsing adapters. The rinsing adapters must be replaced if the O-rings are lost or damaged.
Every three months	– Replace the dome valve and O-rings on the powder container (see "11.8 Replace the dome valve and o-rings on the powder container"). – Replace the O-rings on the corpus (see "11.9 Replace the o-rings on the corpus").
After c. 1000 treatment cycles or after 2 years	Change the powder container. The identical ID number is located on the top and bottom parts of the powder container. Remember this when changing (see "4.3 ID number powder container").
Every 2 years	Send the device for inspection.

If necessary, all the components can be cleaned in an ultrasonic bath e.g. to avoid blockages.

11.2 Removal of powder residue from the nozzle

› Attach the blue rinsing adapter to the nozzle and use a 10 ml disposable pipette to flush water through the air/powder line and remove any powder residue.

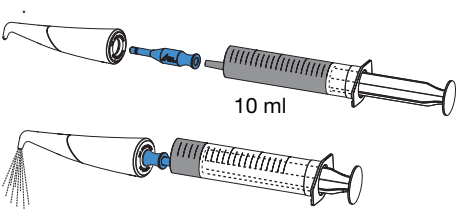

› Remove residual moisture by blowing the air/powder line dry for 10 seconds before using the handpiece ("6.3 Connect the handpiece and dry the inner lumen.").

11.3 Cleaning the suction nozzle and dome valve when changing the powder container

› Clean the suction nozzle and dome valve in the powder container with compressed air when changing the powder container.

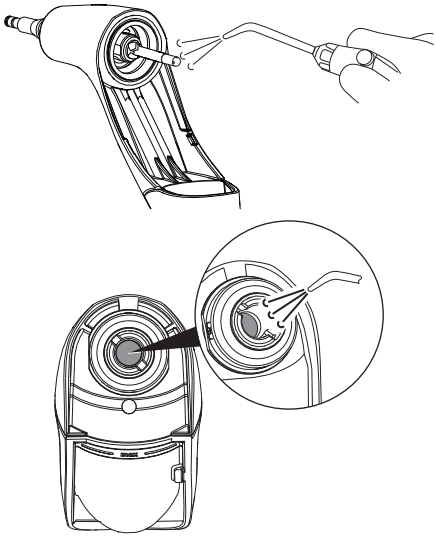

11.4 Free from blockages

› In the event of blockage, vent the entire system before pulling off the nozzle from the corpus: Wait approx. 4 seconds before disconnecting the device from the turbine coupling.

› Place the rinsing adapter (blue) on the nozzle and pump in water with a 10-ml disposable pipette until the blockage has been rectified.

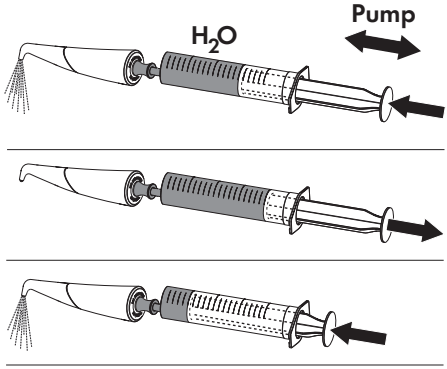

› Remove all the residual moisture by blowing the powder-air line dry for 10 seconds before using the handpiece.

11.5 Freeing the main body of blockages

› In the event of blockage, vent the entire system before pulling off the nozzle from the corpus: Wait approx. 4 seconds before disconnecting the device from the turbine coupling.

› Remove the nozzle with a slight twist movement.

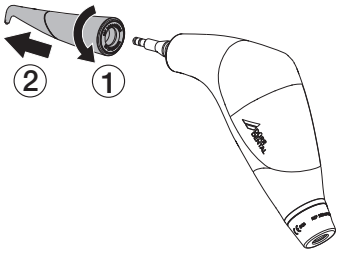

EN

› Unscrew the suction nozzle from the powder-air line.

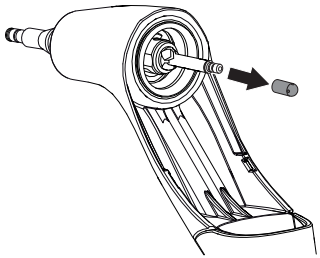

› Penetrate the powder-air line with a suitable instrument e.g. a needle and blow through with air.
› Screw the suction nozzle back on.
› Reprocess the corpus manually or with a machine.

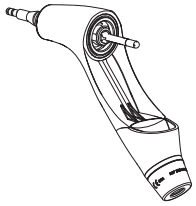

11.6 Check the bayonet catch for its function

› Check the bayonet catch regularly; the pins must not be damaged.

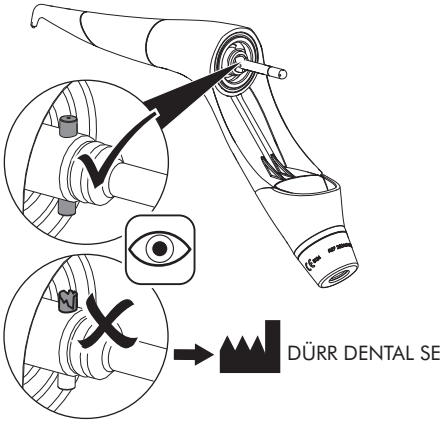

11.7 Check the dome valve

› Unscrew the powder container.

› Inspect the fitted dome valve / check whether is is possible to continue working with it.

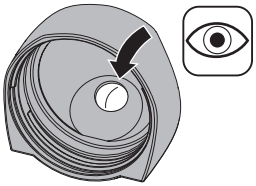

11.8 Replace the dome valve and o-rings on the powder container

Replace every 3 months

› Apply the combination wrench to the powder container in accordance with the black markings on the powder container.
Loosen the union nut on the powder container with the combination wrench.

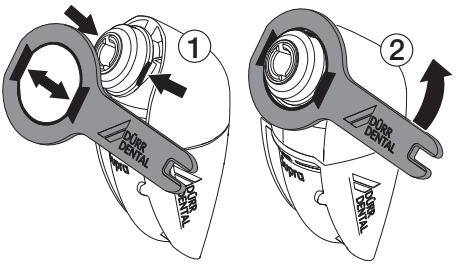

› Take apart the parts.

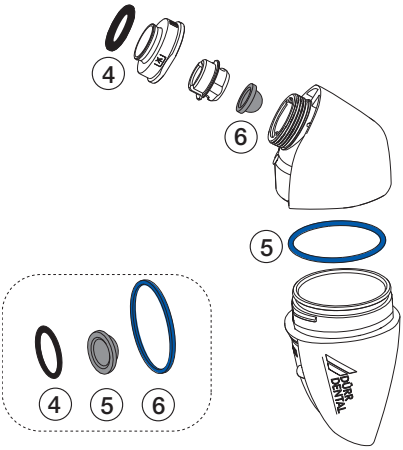

› Replace the o-rings and dome valve.
› Re-install the parts in reverse order.
› Tighten the union nut hand tight using the combination wrench.

11.9 Replace the o-rings on the corpus

Replace every 3 months

› Check the o-rings for damage before every treatment. Replace if necessary.

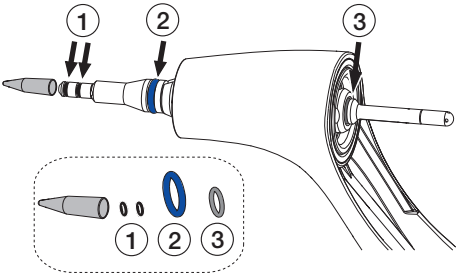

› Use the two small o-rings as assistance in tightening.

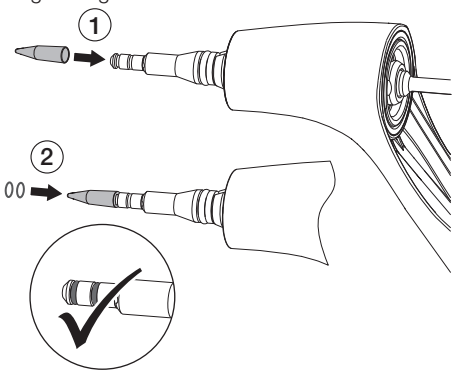

11.10 Replace the suction nozzle and the o-ring

Replace the suction nozzle and O-ring in the event of wear.

› Unscrew the suction nozzle from the powder-air line and remove the o-ring.

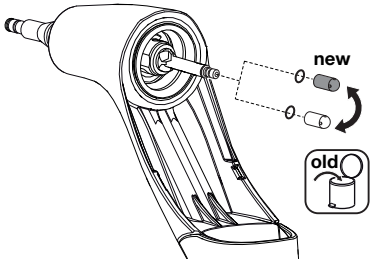

› Place on a new o-ring and screw on a new suction nozzle.

EN

Troubleshooting

12 Tips for operators and service technicians

Any repairs exceeding routine maintenance may only be carried out by qualified personnel or our service.

Error	Possible cause	Remedy
Water issued from between the corpus and the nozzle	O-ring between the corpus and the nozzle is defective.	› Check the O-ring 2 and change if necessary (see "11.9 Replace the o-rings on the corpus").
Air jet falters	O-rings defective	› Check O-rings 1 and change if necessary (see "11.9 Replace the o-rings on the corpus").
Water flows into the powder container during operation	O-rings defective Device stored incorrectly	› Check O-rings 1 and change if necessary (see "11.9 Replace the o-rings on the corpus"). › Check further O-rings and change if necessary
	The corpus and nozzle were not dried properly after reprocessing or rinsing, i.e. there is still residual moisture in the internal powder-air line.	› Blow-dry the powder-air line for 10 seconds in order to eliminate the residual moisture (see "10.8 Check for function").
Too much noise	O-rings defective	› Check the O-rings and change if necessary (see "11.9 Replace the o-rings on the corpus").
Powder / air is issued	O-rings defective	› Check the O-rings and change if necessary (see "11.9 Replace the o-rings on the corpus").
No powder exits from the nozzle	Nozzle blocked	› Remove the blockage on the nozzle (see "11.4 Free from blockages"). › Vent the entire system: wait approx. 4 seconds before disconnecting the device from the turbine coupling.
The powder container is difficult to open and close	Powder on the thread of the powder container	› Remove the powder on the thread before filling.
	O-ring defective	› Replace the o-ring (see "11.8 Replace the dome valve and o-rings on the powder container").

Error	Possible cause	Remedy
Powder escapes from between the powder container and the corpus	O-ring or dome valve defective	› Check o-ring 3 and change if necessary (see "11.9 Replace the o-rings on the corpus").
		› Check the dome valve and replace if necessary (see "11.7 Check the dome valve", or "11.8 Replace the dome valve and o-rings on the powder container").
The powder container moves considerably in the end position on the corpus	O-ring missing	› Fit o-Ring 4 and replace if necessary (see "11.8 Replace the dome valve and o-rings on the powder container").
Powder container does not engage in the end position on the conus	Powder residue in the area around the bayonet connection	› Remove all powder residue in the area around the bayonet connection › Reprocess the powder container and corpus
Powder present in the coupling on the corpus	Corpus or nozzle blocked	› Remove the blockage on the nozzle (see "11.4 Free from blockages").
		› Clean the powder-air line (see "11.5 Freeing the main body of blockages").
		› Reprocess the corpus and nozzle (see "10 Reprocessing").
Coupling of turbine hose does not engage	Powder in the coupling	› Reprocess the corpus.
	Spring washer in the powder jet handpiece defective	› Send the unit for repair.
Turbine connection is defective	The light on the turbine is not switched off (excessive heat development)	› Notify customer service or send the device to be repaired.
Fissures in the powder container	Treatment cycles exceeded.	› Use a new powder container.
	Damage resulting from incorrect handling and use	
Jet formation of the nozzle is irregular or formless	Nozzle is defective (the annular aperture is no longer concentric).	› Replace the nozzle (see "6.5 Check the jet formation" for jet form).
Fall in performance of the handpiece	Internal soiling	› Clean in the ultrasonic bath.
		› Reprocess the corpus and nozzle.
Insufficient removal	Powder container is empty or only half-full	› Fill the powder container.

EN

Appendix

13 Handover record

This document confirms that a qualified handover of the medical device has taken place and that appropriate instructions have been provided for it. This must be carried out by a qualified adviser for the medical device, who will instruct you in the proper handling and operation of the medical device.

Product name	Order number (REF)	Serial number (SN)

- ☐ Visual inspection of the packaging for any damage
- ☐ Unpacking the medical device and checking for damage
- ☐ Confirmation of the completeness of the delivery
- ☐ Instruction in the proper handling and operation of the medical device based on the operating instructions

Notes:

Name of person receiving instruction:	Signature:

Name and address of the qualified adviser for the medical device:

Date of handover:

Signature of the qualified adviser for the medical device:

Hersteller / Manufacturer:

DÜRR DENTAL SE
Höpfigheimer Str. 17
74321 Bietigheim-Bissingen
Germany
Fon: +49 7142 705-0
www.duerrdental.com
info@duerrdental.com

DÜRR DENTAL